PHOTOFACT* Folder

FADA MODELS
TV30, 799, 899, 930, 940

IMPORTANT FILING NOTICE

The contents for this envelope will be found among the last folders in this complete set of folders . . . *unless* it has been purchased as part of a *complete* volume of PHOTOFACTS assembled in a DeLuxe Binder.

Merely insert the corresponding folder on this model in this envelope to retain proper filing and indexing order.

MODEL TV30

FADA MODELS
TV30, 799, 899, 930, 940

HOWARD W. SAMS & CO., INC. • 2924 East Washington Street • Indianapolis 1, Indiana

Date 10/49 Set No. 74—Folder No. 3

FADA MODELS TV30, 799, 899, 930, 940

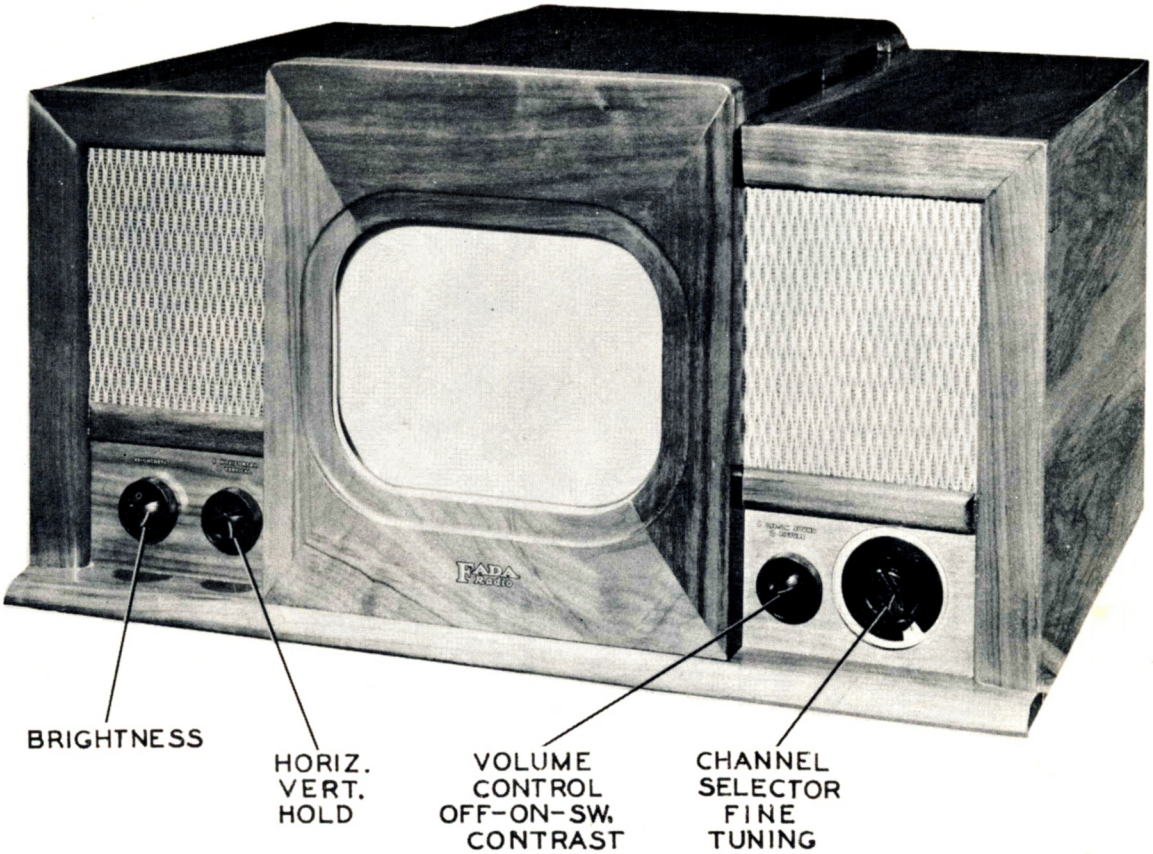

FADA MODELS TV30, 799, 899, 930, 940

FADA MODEL TV-30

TRADE NAME Fada, Models TV-30, 799, 899, 930, and 940
MANUFACTURER Fada Radio and Electric Co., Inc., 525 Main St., Belleville, New Jersey
TYPE SET Television Receiver
TUBES Thirty

POWER SUPPLY 105-125 Volts 60 cycle AC RATING: 2.5 Amp. @ 117 Volts AC
TUNING RANGE—Channels 2 thru 13

INDEX

HOWARD W. SAMS & CO., INC. • Indianapolis 7, Indiana

DATE 10/49 SET #74 FOLDER 3

FADA MODELS TV30, 799, 899, 930, 940

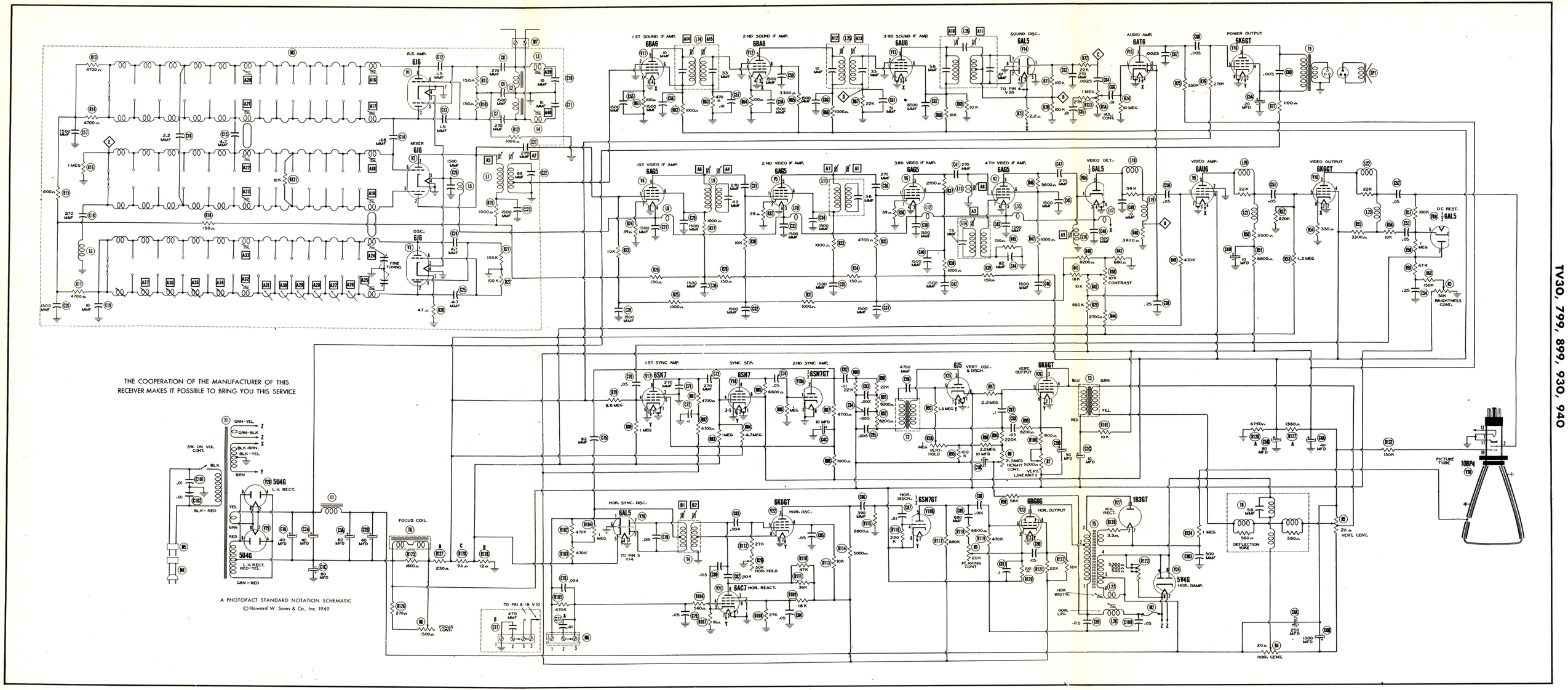

THE COOPERATION OF THE MANUFACTURER OF THIS RECEIVER MAKES IT POSSIBLE TO BRING YOU THIS SERVICE

A PHOTOFACT STANDARD NOTATION SCHEMATIC

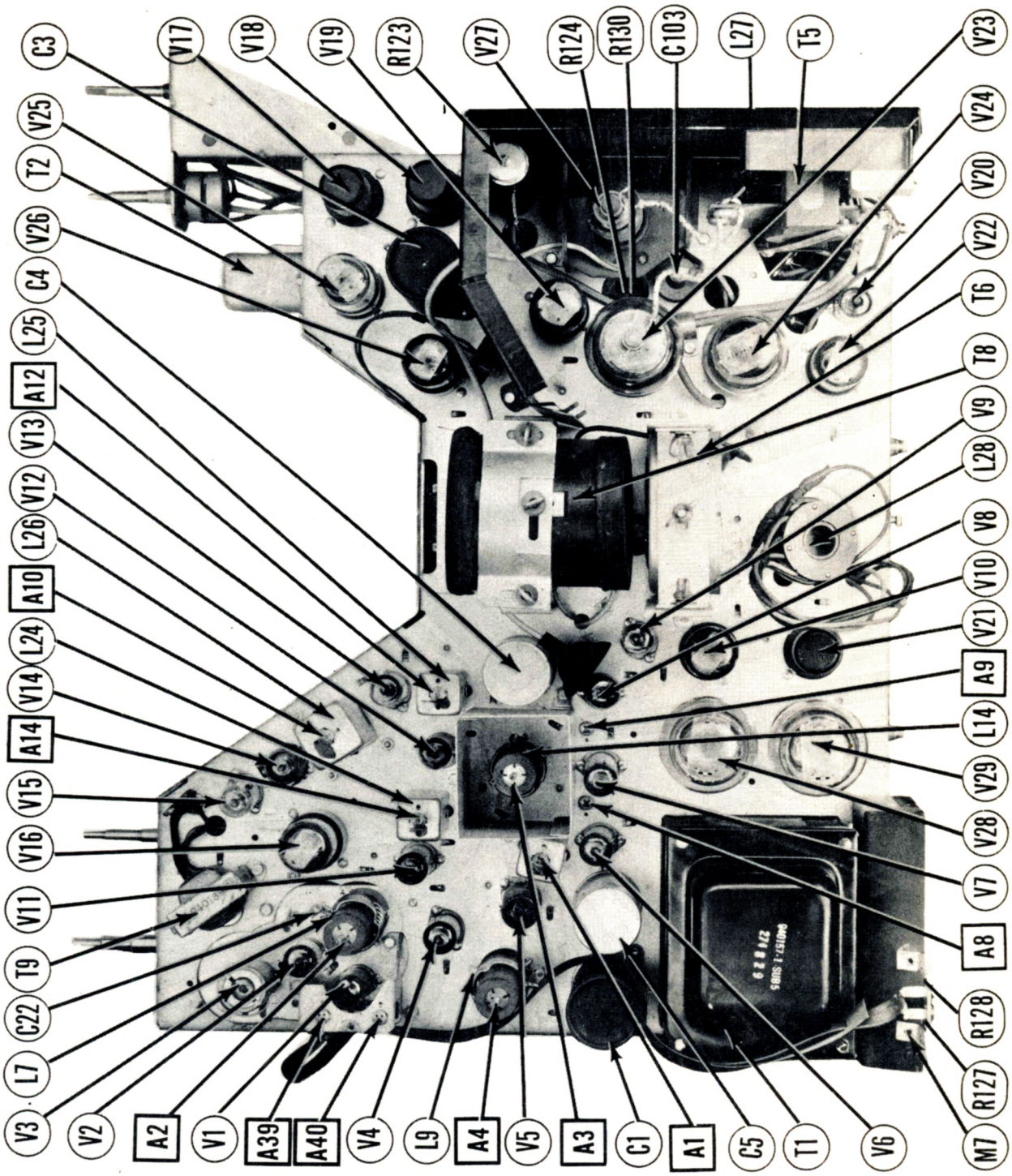

CHASSIS TOP VIEW

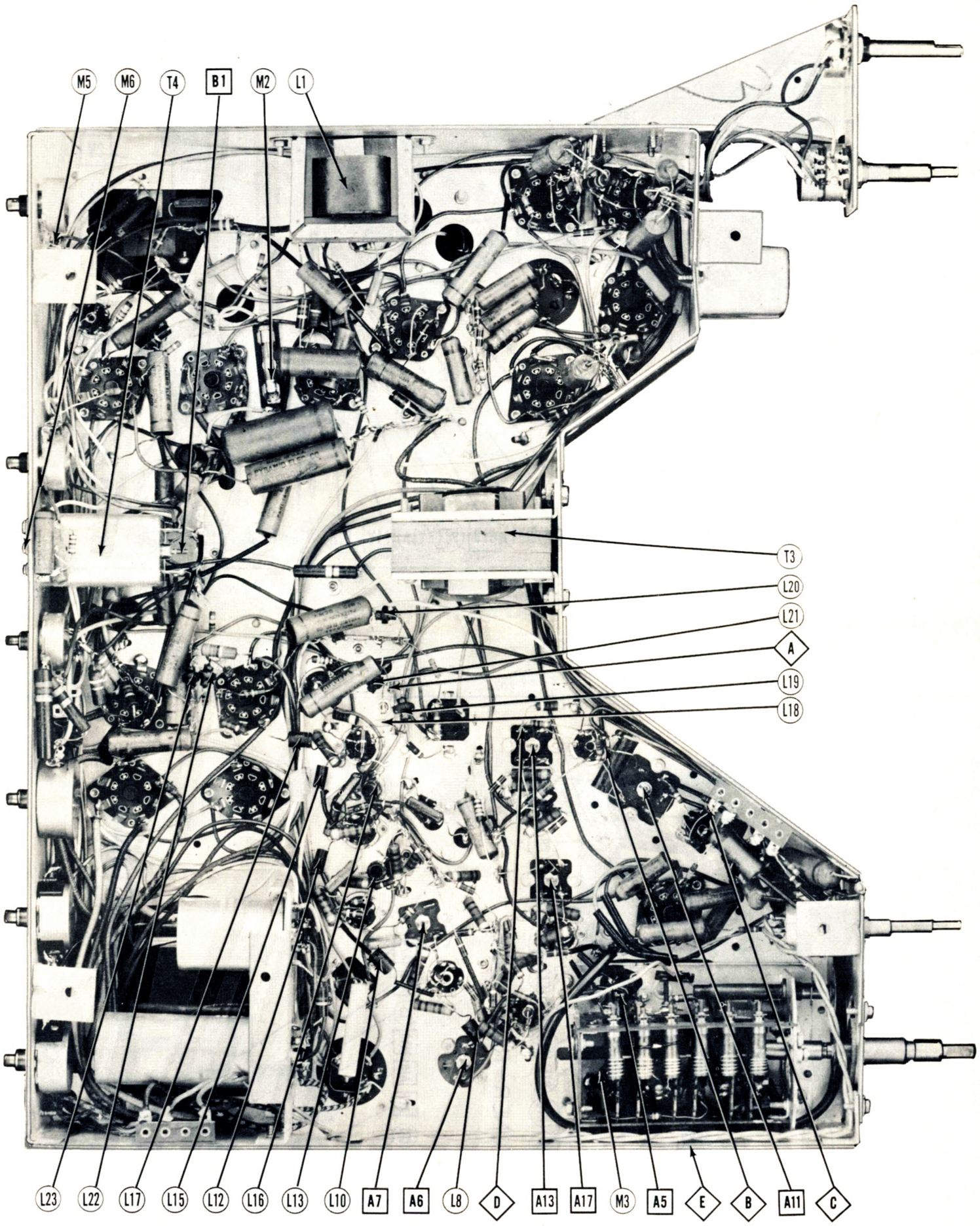

CHASSIS BOTTOM VIEW-TRANS., INDUCTOR AND ALIGNMENT IDENTIFICATION

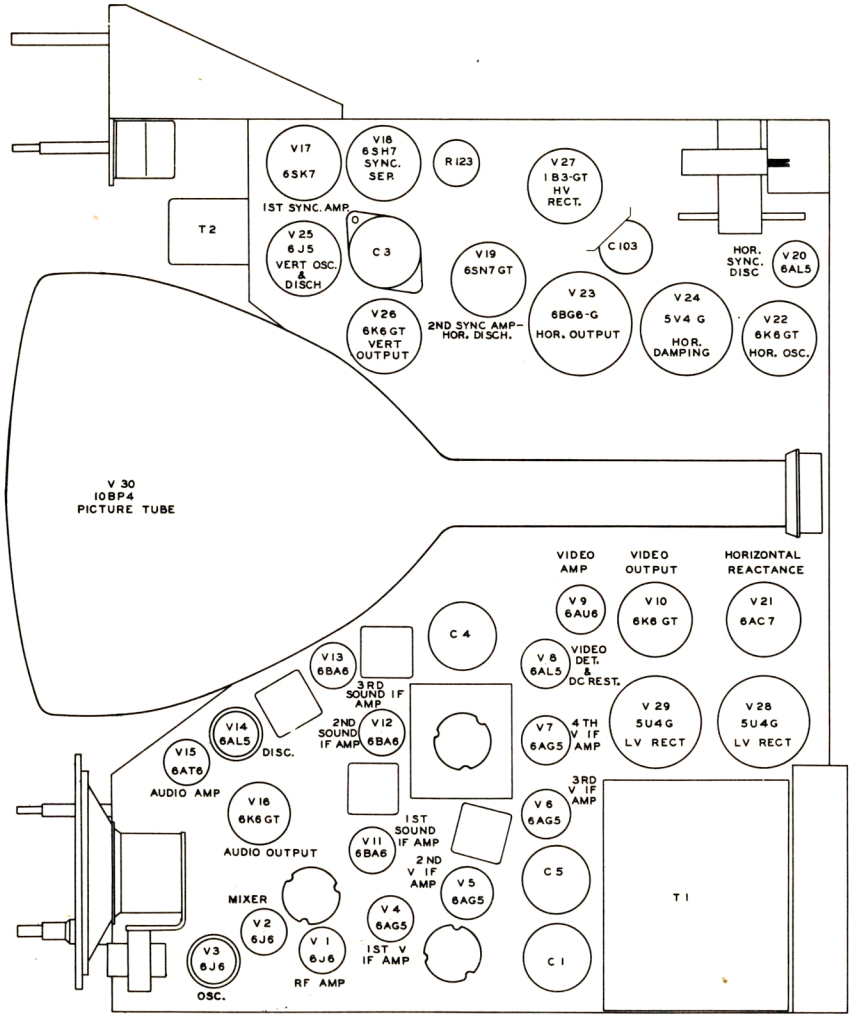

TOP VIEW

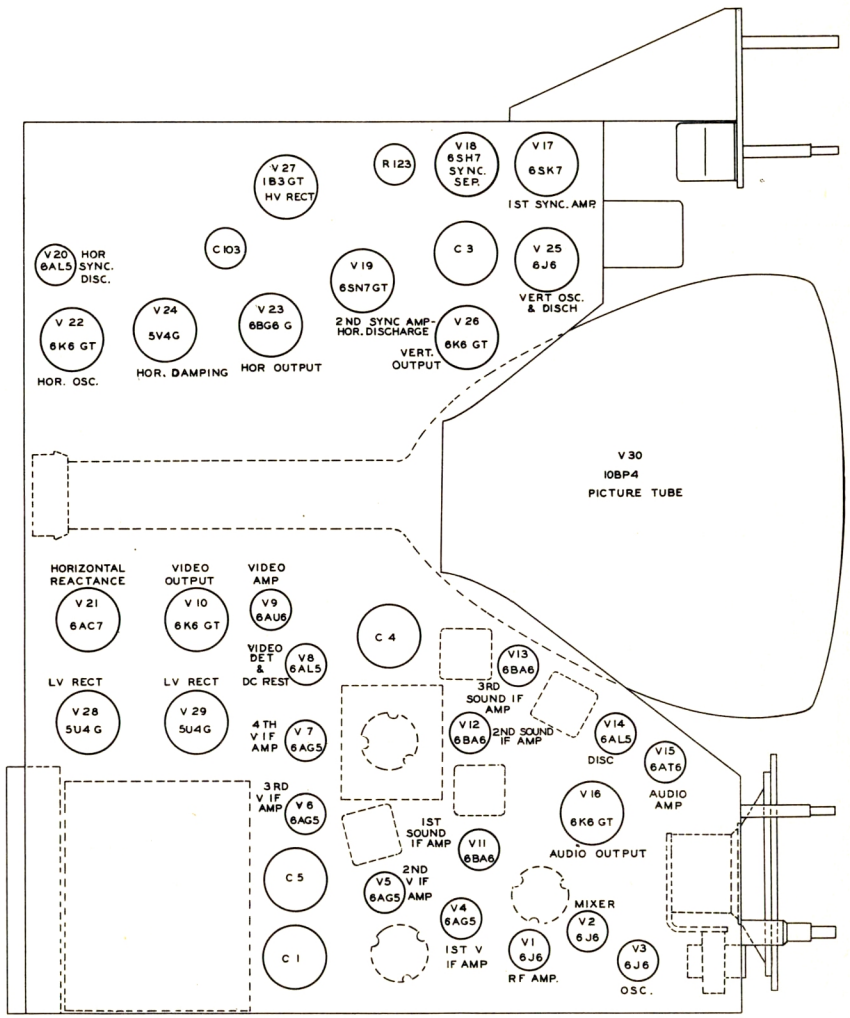

BOTTOM VIEW

TUBE PLACEMENT CHART

TV30, 799, 899, 930, 940

ALIGNMENT INSTRUCTIONS

PRE – ALIGNMENT INSTRUCTIONS—READ CAREFULLY BEFORE ATTEMPTING ALIGNMENT

If alignment is performed with picture tube removed, remove V22 from its socket to disable the high voltage supply.
The oscillator tube (V3) should be removed when performing IF adjustments. Use insulated alignment screwdriver for adjusting.

VIDEO IF ALIGNMENT

If receiver is badly misaligned making it impossible to get sufficent reading on VTVM with the signal being fed to the ant. terminals, signal may be fed to the mixer grid. This point is accessible through the hole in the chassis on right side of tuner (Point E).

	DUMMY ANTENNA	SIGNAL GENERATOR COUPLING	SIGNAL GENERATOR FREQUENCY	CHANNEL	CONNECT VTVM	ADJUST	REMARKS
1				9	DC probe to junction of R40 and R41. Common to chassis.		Set contrast control to give a -3 volt reading. Leave at this setting during entire IF Alignment procedure.
2	Direct	To ant. terminals. (See prealignment notes)	19.75MC	9	DC probe to point A. Common to chassis.	A1	Adjust for minimum deflection.
3	Direct	"	21.25MC	9	"	A2	"
4	Direct	"	21.25MC	9	"	A3	"
5	Direct	"	27.25MC	9	"	A4	"
6	Direct	"	21.8MC	9	"	A5	Adjust for maximum deflection.
7	Direct	"	25.3MC	9	"	A6	"
8	Direct	"	22.3MC	9	"	A7	"
9	Direct	"	25.2MC	9	"	A8	"
10	Direct	"	23.4MC	9	"	A9	Adjust for maximum deflection. If A7 required adjustment in Step 8 repeat Step 2. If FM signal gen. is not available continue with Step 12.

OVERALL VIDEO IF ALIGNMENT

Connect the synchronized sweep voltage from the signal generator to the horizontal amplifier in the scope for horizontal deflection.
The waveforms shown may be inverted depending on the number of amplifying stages in the vertical amplifier in the scope being used.

	DUMMY ANTENNA	SIGNAL GENERATOR COUPLING	SWEEP GENERATOR FREQUENCY	MARKER GENERATOR FREQUENCY	CHANNEL	CONNECT SCOPE	ADJUST	REMARKS
11	5000 MMF	To dummy mixer tube. (See Fig. 6).	24MC (10MC sweep)	See Fig. 4.	9	Vert. Amp. to Point A. Ground to chassis.	A5,A6, A7,A8, A9	Make slight adjustments if necessary to obtain response curve per Fig. 4. If considerable adjustment is required the traps must be realigned.

SOUND IF ALIGNMENT USING VTVM

Do not remove the shield covering the discriminator tube socket during Step 12. Fashion hook on 1 Megohm resistor and make connection to Point B through alignment hole in shield.

	DUMMY ANTENNA	SIGNAL GENERATOR COUPLING	SIGNAL GENERATOR FREQUENCY	CHANNEL	CONNECT VTVM	ADJUST	REMARKS
12	5000MMF	High side to Pin #1 of 3rd Sound IF (V13). Low side to chassis.	21.25MC	9	DC probe to Point B in series with 1 Meg. Common to chassis.	A10	Detune A11. Adjust A10 for maximum deflection.
13	5000MMF	"	"	9	DC probe to Point C. Common to chassis.	A11	Adjust for zero reading. A positive or negative reading is obtained on either side of correct setting.
14	5000MMF	High side to Pin #1 of 2nd Sound IF (V12). Low side to chassis.	"	9	DC probe to Point D. Common to chassis	A12,A13	Adjust for maximum deflection.
15	5000MMF	High side to tap on trap winding of L7. Low side to chassis.	"	9	"	A14, A15	"

SOUND IF ALIGNMENT USING FM SIGNAL GENERATOR AND OSCILLOSCOPE

	DUMMY ANTENNA	SIGNAL GENERATOR COUPLING	SWEEP GENERATOR FREQUENCY	MARKER GENERATOR FREQUENCY	CHANNEL	CONNECT SCOPE	ADJUST	REMARKS
12	5000MMF	High side to Pin 1 of 3rd Sound IF (V13). Low side to chassis.	21.25MC (600KC sweep)	21.25MC	9	Vertical amp. to Point C. Ground to chassis.	A10,A11	Adjust for maximum amplitude of peaks and straightness of diagonal line with marker at center of line.
13	5000MMF	High side to Pin 1 of 2nd Sound IF (V12). Low side to chassis.	"	"	9	Vert. amp. to Point D in series with 33KΩ. Ground to chassis.	A12,A13	Adjust for maximum amplitude and symmetry per Fig. 2.
14	5000MMF	High side to tap on trap winding of L7. Low side to chassis.	"	"	9	"	A14,A15	Adjust for maximum amplitude and symmetry per Fig. 3. Continue with Step 16.

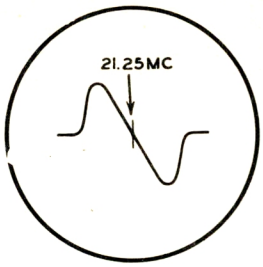

FIG. 1

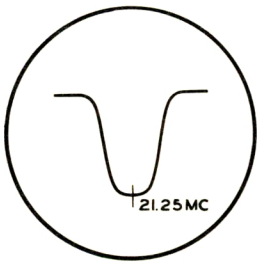

FIG. 2

FIG. 3

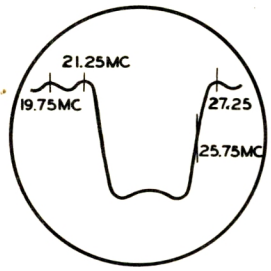

FIG. 4


FIG. 5

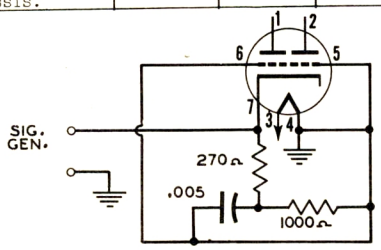

DUMMY MIXER TUBE

CAREFULLY BEND PIN 7 AT RIGHT ANGLE. CONNECT PINS 5 & 6 TO PIN 4 WHICH IS GROUNDED AT THE SOCKET. CONNECT OTHER COMPONENTS AS SHOWN.

RF & MIXER LINE ALIGNMENT

On those models having the RF Grid returned to the contrast control it is necessary to set the bias at -1.5 volts. Connect DC probe of VTVM to pin 5 or 6 of 1st AF Tube (V15), common to chassis and set contrast control for reading of -1.5 volts.

The signal generator output should be terminated with a resistance equal to its output impedance (usually 50 ohms).

These adjustments are usually very stable and alignment should not be attempted unless they are known to be out of alignment.

	DUMMY ANTENNA	SIGNAL GENERATOR COUPLING	SWEEP GENERATOR FREQUENCY	MARKER GENERATOR FREQUENCY	CHANNEL	CONNECT SCOPE	ADJUST	REMARKS
16	120Ω carbon res. in series with each lead	To ant. terminals.	177MC (10MC sweep)	175.25MC and 179.75MC	7	Vert. amp. to Point E in series with 10KΩ. Ground to chassis.	A16,A17, A18,A19	Adjust for approx. flat top response per Fig. 5 with markers above 70%.
17	"	"	183MC (10MC sweep)	181.25MC and 185.75MC	8	"		Check for response curve per Fig. 5.
18	"	"	189MC (10MC sweep)	187.25MC and 191.75MC	9	"		"
19	"	"	195MC (10MC sweep)	193.25MC and 197.75MC	10	"		"
20	"	"	201MC (10MC sweep)	199.25MC and 203.75MC	11	"		"
21	"	"	207MC (10MC sweep)	205.25MC and 209.75MC	12	"		"
22	"	"	213MC (10MC sweep)	211.25MC and 215.75MC	13	"		"

If markers are below 70% on any channel make slight adjustment of A16, A17, A18 and A19 with channel selector on that channel. Recheck the other low band channels.

	DUMMY ANTENNA	SIGNAL GENERATOR COUPLING	SIGNAL GENERATOR FREQUENCY	MARKER GENERATOR FREQUENCY	CHANNEL	CONNECT SCOPE	ADJUST	REMARKS
23	120Ω carbon res. in series with each lead	To ant. terminals.	85MC (10MC sweep)	83.25MC and 87.75MC	6	Vert. amp. to Point E in series with 10KΩ. Ground to chassis.	A20,A21 A22,A23	Adjust for approx. flat top response per Fig. 5 with markers above 70%.
24	"	"	79MC (10MC sweep)	77.25MC and 81.75MC	5	"		Check for response curve per Fig. 5.
25	"	"	69MC (10MC sweep)	67.25MC and 71.75MC	4	"		"
26	"	"	63MC (10MC sweep)	61.25MC and 65.75MC	3	"		"
27	"	"	57MC (10MC sweep)	55.25MC and 59.75MC	2	"		"

If markers are below 70% on any channel make slight adjustments of A20, A21, A22 and A23 with channel selector on that channel. Recheck the other high band channels.

OSCILLATOR ALIGNMENT

	DUMMY ANTENNA	SIGNAL GENERATOR COUPLING	SWEEP GENERATOR FREQUENCY	CHANNEL	CONNECT VTVM	ADJUST	REMARKS
28	2 - 120Ω carbon res.	To ant. terminals.	215.75MC	13	DC probe to Point D. Common to chassis.	A24,A25	Adjust for zero reading. A positive and negative reading is obtained on either side of correct setting. Keep A24 and A25 slugs at approx. the same relative setting.
29	"	"	209.75MC	12	"	A26	Adjust for zero reading as above.
30	"	"	203.75MC	11	"	A27	"
31	"	"	197.75MC	10	"	A28	"
32	"	"	191.75MC	9	"	A29	"
33	"	"	185.75MC	8	"	A30	"
34	"	"	179.75MC	7	"	A31	"
35	"	"	87.75MC	6	"	A32,A33	Adjust for zero reading keeping A32 and A33 slugs at approx. the same relative position.
36	"	"	81.75MC	5	"	A34	Adjust for zero reading.
37	"	"	71.75MC	4	"	A35	" " " "
38	"	"	65.75MC	3	"	A36	" " " "
39	"	"	59.75MC	2	"	A37	" " " "

MIXER GRID TRAP ADJUSTMENT

A. Match the output of the signal generator (usually 50Ω carbon resistor across the gen. output and 120Ω carbon resistors in each lead) and connect to receiver antenna terminals.
B. Connect oscilloscope to Point E through 10KΩ.
C. Shunt 1st Video IF Grid to ground with 1000 MMF cap. using shortest possible leads.
D. Loosely couple marker generator to antenna terminals.
E. Turn channel switch and marker generator through low frequency channels and observe response of each channel.
F. Select channel that is essentially flat with sound and picture markers at 80% or more on the response curve.
G. Remove shunt on 1st IF Grid and shunt the 2nd Video IF Grid to ground.
H. Adjust A38 (rear of tuner) for RF response similar to one selected with 1st IF Grid shunted.
NOTE: In later productions A38 is a fixed capacitor (C18). In those receivers this step may be followed as a check that correct mixer operation is obtained.

WAVE TRAP ADJUSTMENT

Wave traps A39 and A40 are used for specific types of interference and their alignment will depend upon the type encountered.

With the receiver tuned to the channel having the interference, set fine tuning control until maximum interference is received. Adjust A39 and A40 for minimum interference in the picture and sound keeping the cores at approximately the same relative position. Then turn one core 1/2 turn and adjust the other for minimum interference.

VOLTAGE AND RESISTANCE MEASUREMENTS

VOLTAGE READINGS

Item	Tube	Pin 1	Pin 2	Pin 3	Pin 4	Pin 5	Pin 6	Pin 7	Pin 8	Cap
V 1	6J6	50VDC	50VDC	6.2VAC	0V.	-.2VDC	-.2VDC	0V.	-	-
V 2	6J6	95VDC	95VDC	6.2VAC	0V.	-2VDC	-3.1VDC	0V.	-	-
V 3	6J6	55VDC	55VDC	6.2VAC	0V.	-5.4VDC	-5.2VDC	.2VDC	-	-
V 4	6AG5	0V.	0V.	0V.	6.2VAC	95VDC	95VDC	.3VDC	-	-
V 5	6AG5	-.8VDC	.2VDC	6.2VAC	0V.	98VDC	98VDC	.2VDC	-	-
V 6	6AG5	-.8VDC	.2VDC	6.2VAC	0V.	93VDC	105VDC	.2VDC	-	-
V 7	6AG5	0V.	1VDC	6.2VAC	0V.	85VDC	110VDC	1VDC	-	-
V 8	6AL5	0V.	0V.	6.2VAC	0V.	.7VDC	0V.	0V.	-	-
V 9	6AU6	-.6VDC	0V.	0V.	6.2VAC	255VDC	117VDC	0V.	-	-
V 10	6K6GT	0V.	0V.	92VDC	117VDC	-2VDC	0V.	6.2VAC	2.8VDC	-
V 11	6BA6	0V.	0V.	0V.	6.2VAC	103VDC	103VDC	1.4VDC	-	-
V 12	6BA6	0V.	0V.	6.2VAC	0V.	107VDC	105VDC	1VDC	-	-
V 13	6AU6	-.3VDC	0V.	0V.	6.2VAC	45VDC	45VDC	0V.	-	-
V 14	6AL5	2.2VDC	-.4VDC	4.9VAC	0V.	0V.	0V.	-.7VDC	-	-
V 15	6AT6	-.4VDC	0V.	0V.	6.2VAC	-.8VDC	-.8VDC	75VDC	-	-
V 16	6K6GT	0V.	6.2VAC	240VDC	250VDC	-9VDC	0V.	0V.	0V.	-
V 17	6SK7	0V.	0V.	0V.	-.8VDC	0V.	108VDC	6.2VAC	208VDC	-
V 18	6SH7	0V.	0V.	0V.	-2.6VDC	0V.	117VDC	6.2VAC	115VDC	-
V 19	6SN7GT	-1.4VDC	77VDC	0V.	-120VDC	-37VDC	-90VDC	6.2VAC	0V.	-
V 20	6AL5	-.8VDC	-5.8VDC	0V.	4.9VAC	-2VDC	0V.	-6.5VDC	-	-
V 21	6AC7	0V.	0V.	0V.	-.9VDC	0V.	105VDC	6.2VAC	190VDC	-
V 22	6K6GT	0V.	0V.	170VDC	210VDC	-18.5VDC	340VDC	6.2VAC	.3VDC	-
V 23	6BG6-G	0V.	6.2VAC	-82VDC	0V.	-94VDC	0V.	0V.	165VDC	#
V 24	5V4G	0V.	350VDC	0V.	290VDC	0V.	290VDC	0V.	350VDC	-
V 25	6J5	0V.	0V.	-3.2VDC 200VDC	-90VDC	-115VDC	-85VDC	6.2VAC	-90VDC	-
V 26	6K6GT	0V.	6.2VAC	187VDC	187VDC	-55VDC	-67VDC	0V.	-50VDC	-
V 27	1B3GT	#DO NOT	MEASURE.							
V 28	5U4G	0V.	350VDC	0V.	360VAC	0V.	360VAC	0V.	350VDC	-
V 29	5U4G	0V.	350VDC	0V.	360VAC	0V.	360VAC	0V.	350VDC	-
V 30	10BP4	0V.	1VDC	PIN 10 280VDC	PIN 11 0V.	PIN 12 6.2VAC				

#DO NOT MEASURE.

RESISTANCE READINGS

Item	Tube	Pin 1	Pin 2	Pin 3	Pin 4	Pin 5	Pin 6	Pin 7	Pin 8	Cap
V 1	6J6	6KΩ*	6KΩ*	.1Ω	0Ω	1KΩ	1KΩ	0Ω	-	-
V 2	6J6	3KΩ*	3KΩ*	.1Ω	0Ω	1 Meg.	1 Meg.	0Ω	-	-
V 3	6J6	6.8KΩ*	6.8KΩ*	.1Ω	0Ω	100KΩ	100KΩ	47Ω	-	-
V 4	6AG5	17KΩ	40Ω	0Ω	.1Ω	3KΩ*	3KΩ*	40Ω	-	-
V 5	6AG5	16KΩ	40Ω	.1Ω	0Ω	3KΩ*	3KΩ*	40Ω	-	-
V 6	6AG5	10KΩ	40Ω	.1Ω	0Ω	5KΩ*	2.5KΩ*	40Ω	-	-
V 7	6AG5	.2Ω	150Ω	.1Ω	0Ω	7.5KΩ*	2.5KΩ*	150Ω	-	-
V 8	6AL5	.2Ω	100KΩ	.1Ω	0Ω	1.2 Meg.	0Ω	4KΩ	-	-
V 9	6AU6	500KΩ	0Ω	0Ω	.1Ω	9KΩ*	1.4KΩ*	0Ω	-	-
V 10	6K6GT	0Ω	0Ω	4.5KΩ*	1.4KΩ*	500KΩ	INF.	.1Ω	330Ω	-
V 11	6BA6	.1Ω	0Ω	0Ω	.1Ω	2.5KΩ*	2.5KΩ*	100Ω	-	-
V 12	6BA6	500KΩ	0Ω	.1Ω	0Ω	2.5KΩ*	4.2KΩ*	100Ω	-	-
V 13	6AU6	20KΩ	0Ω	0Ω	.1Ω	7KΩ*	7KΩ*	0Ω	-	-
V 14	6AL5	200KΩ	100KΩ	.1Ω	0Ω	0Ω	0Ω	100KΩ	-	-
V 15	6AT6	10 Meg.	0Ω	0Ω	.1Ω	10KΩ	10KΩ	330KΩ*	-	-
V 16	6K6GT	INF.	.1Ω	1.5KΩ*	1KΩ*	250KΩ	260KΩ	0Ω	0Ω	-
V 17	6SK7	0Ω	0Ω	0Ω	900KΩ	0Ω	2.2KΩ*	.1Ω	9KΩ*	-
V 18	6SH7	0Ω	0Ω	0Ω	900KΩ	0Ω	1.4KΩ*	.1Ω	7.5KΩ*	-
V 19	6SN7GT	1.2 Meg.	7KΩ*	0Ω	230KΩ	650KΩ*	450Ω	.1Ω	0Ω	-
V 20	6AL5	900KΩ	1.5 Meg.	0Ω	.1Ω	12Ω	0Ω	1.5 Meg.	-	-
V 21	6AC7	0Ω	0Ω	0Ω	1.4 Meg.	10Ω	18KΩ*	.1Ω	20KΩ*	-
V 22	6K6GT	INF.	0Ω	5KΩ*	10KΩ*	25KΩ	5.8KΩ*	.1Ω	10Ω	-
V 23	6BG6-G	INF.	.1Ω	540Ω	INF.	450KΩ	INF.	0Ω	9.5KΩ*	6KΩ*
V 24	5V4G	INF.	5.5KΩ*	INF.	50Ω*	INF.	50Ω*	INF.	5.5KΩ*	-
V 25	6J5	0Ω	0Ω	280KΩ* 1.3 Meg.*	65KΩ	1.5 Meg.	65KΩ	.1Ω	450Ω	-
V 26	6K6GT	INF.	.1Ω	10KΩ*	10KΩ*	2.5 Meg.	2500Ω	0Ω	2KΩ 6.3KΩ	-
V 27	1B3GT	INF.	INF.	INF.	INF.	INF.	INF.	INF.	INF.	6KΩ*
V 28	5U4G	INF.	5.5KΩ	INF.	460Ω	INF.	460Ω	INF.	5.5KΩ	-
V 29	5U4G	INF.	5.5KΩ	INF.	460Ω	INF.	460Ω	INF.	5.5KΩ	-
V 30	10BP4	0Ω	1.3 Meg.	PIN #10 150KΩ*	PIN #11 0Ω	PIN #12 .1Ω				

*MEASURED FROM PIN 8 OF V28.

1. DC Voltage measurements are at 20,000 ohms per volt; AC Voltages measured at 1000 ohms.
2. Socket connections are shown as bottom views.
3. Measured values are from socket pin to common negative unless otherwise stated.
4. Line voltage maintained at 117 volts for voltage readings.
5. Front panels controls set at maximum.
6. Where readings may vary according to the setting of the service controls, both minimum and maximum readings are given.

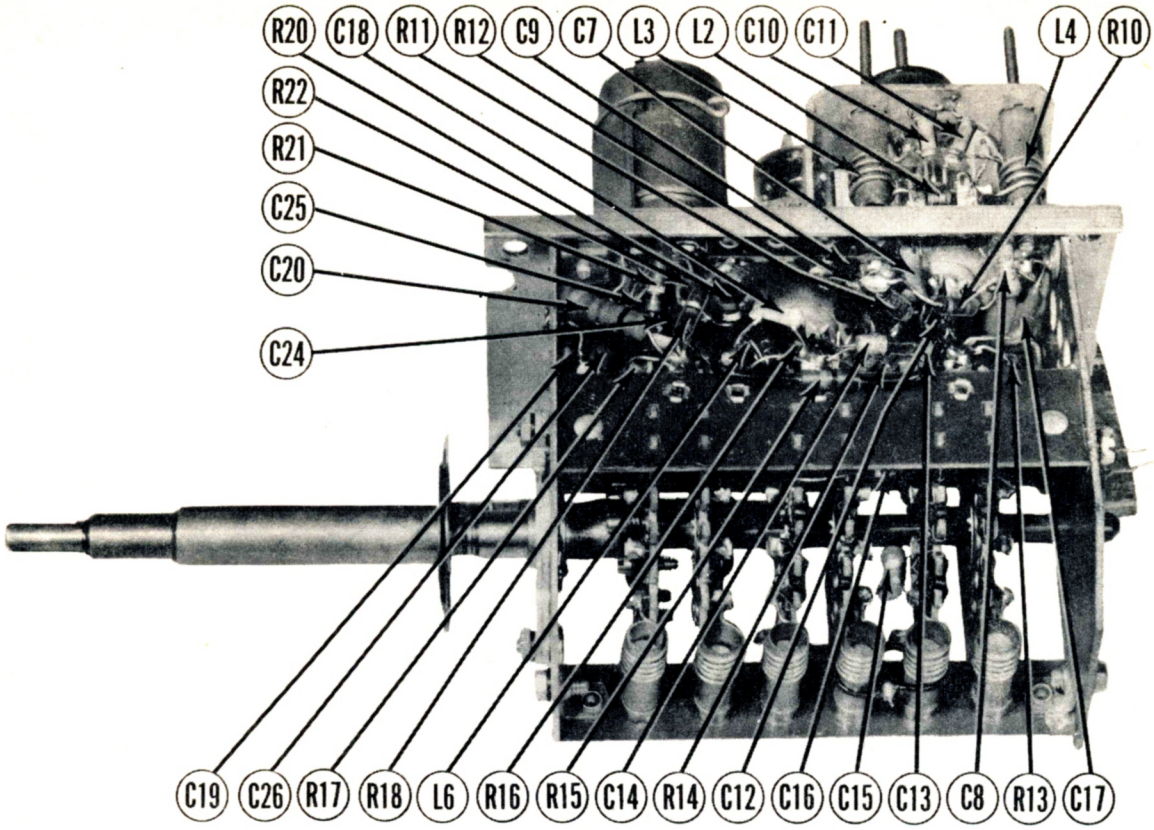

RF TUNER-RIGHT SIDE

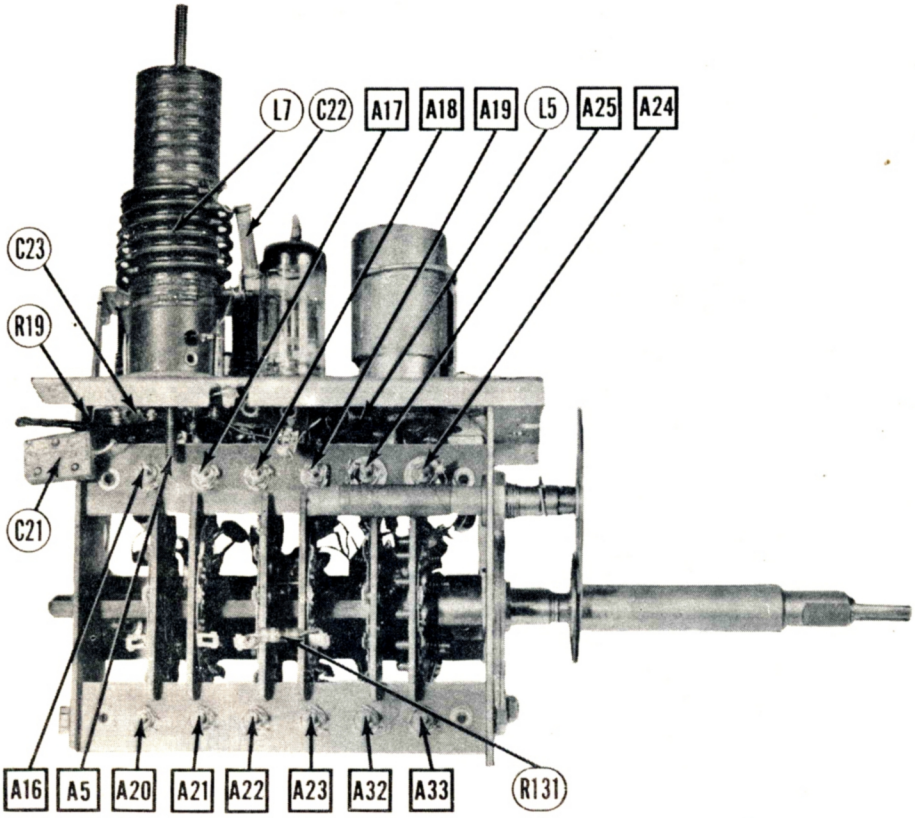

RF TUNER-LEFT SIDE

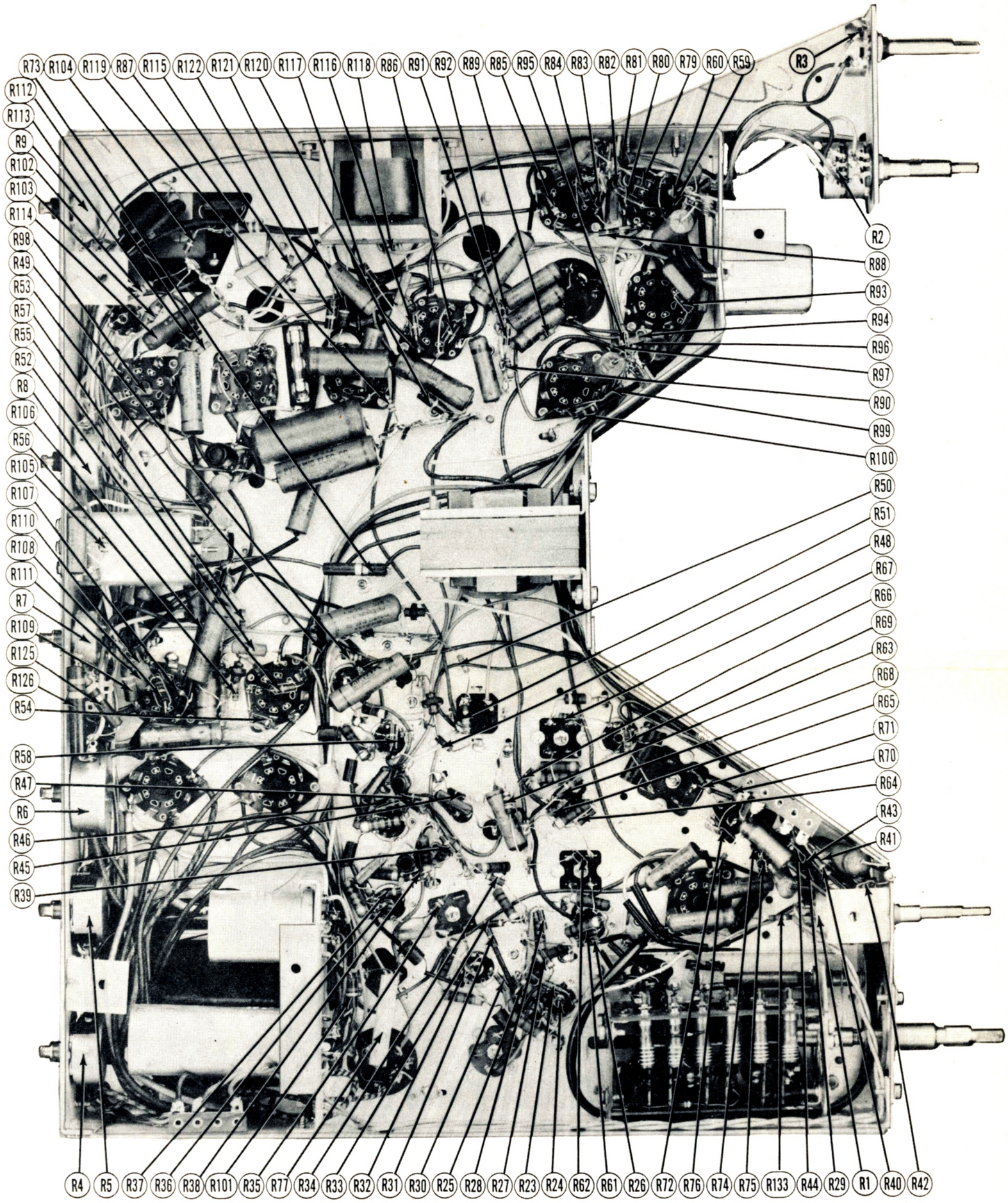

CHASSIS BOTTOM VIEW–RESISTOR IDENTIFICATION

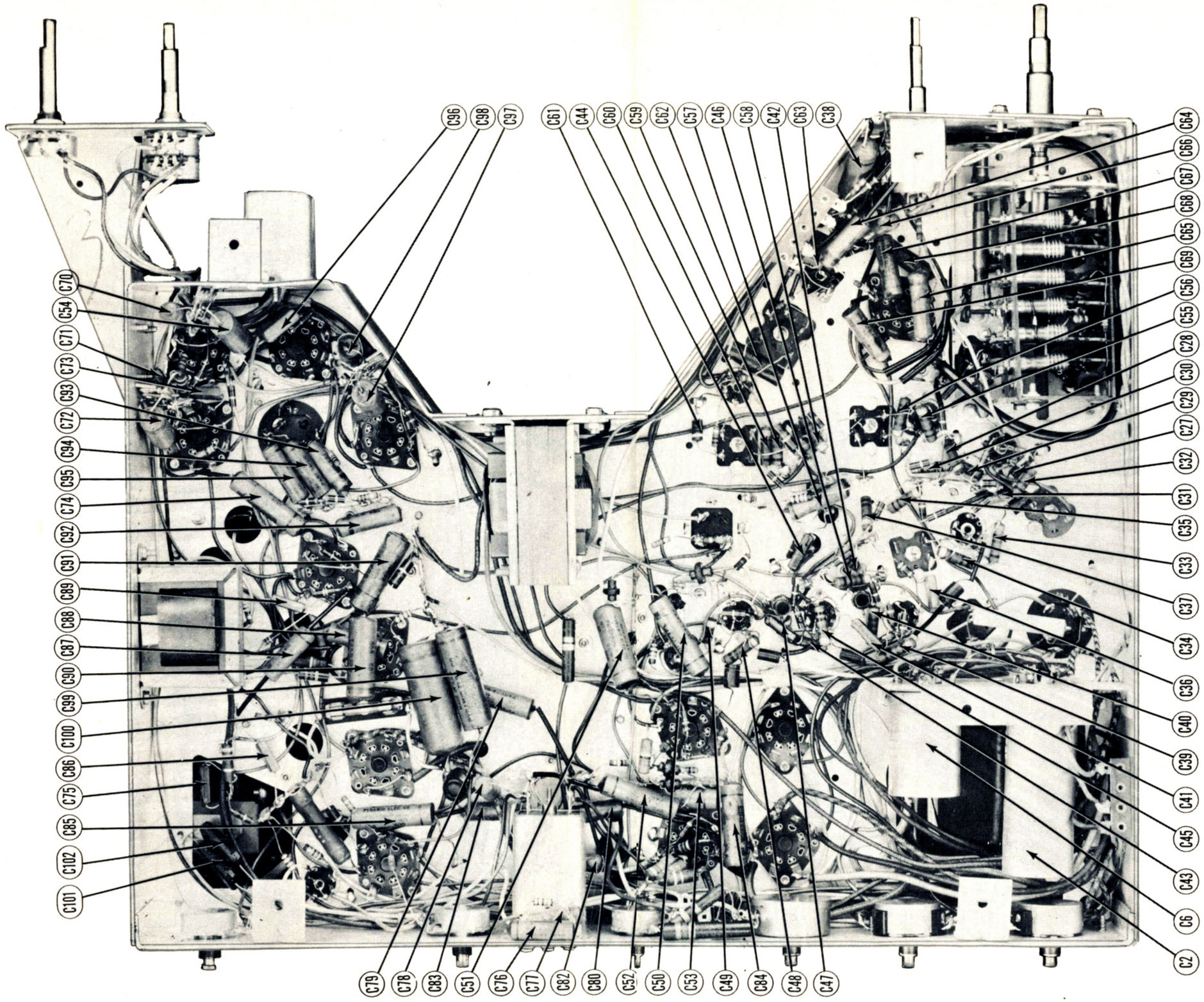

CHASSIS BOTTOM VIEW–CAPACITOR IDENTIFICATION

FADA MODELS TV30, 799, 899, 930, 940

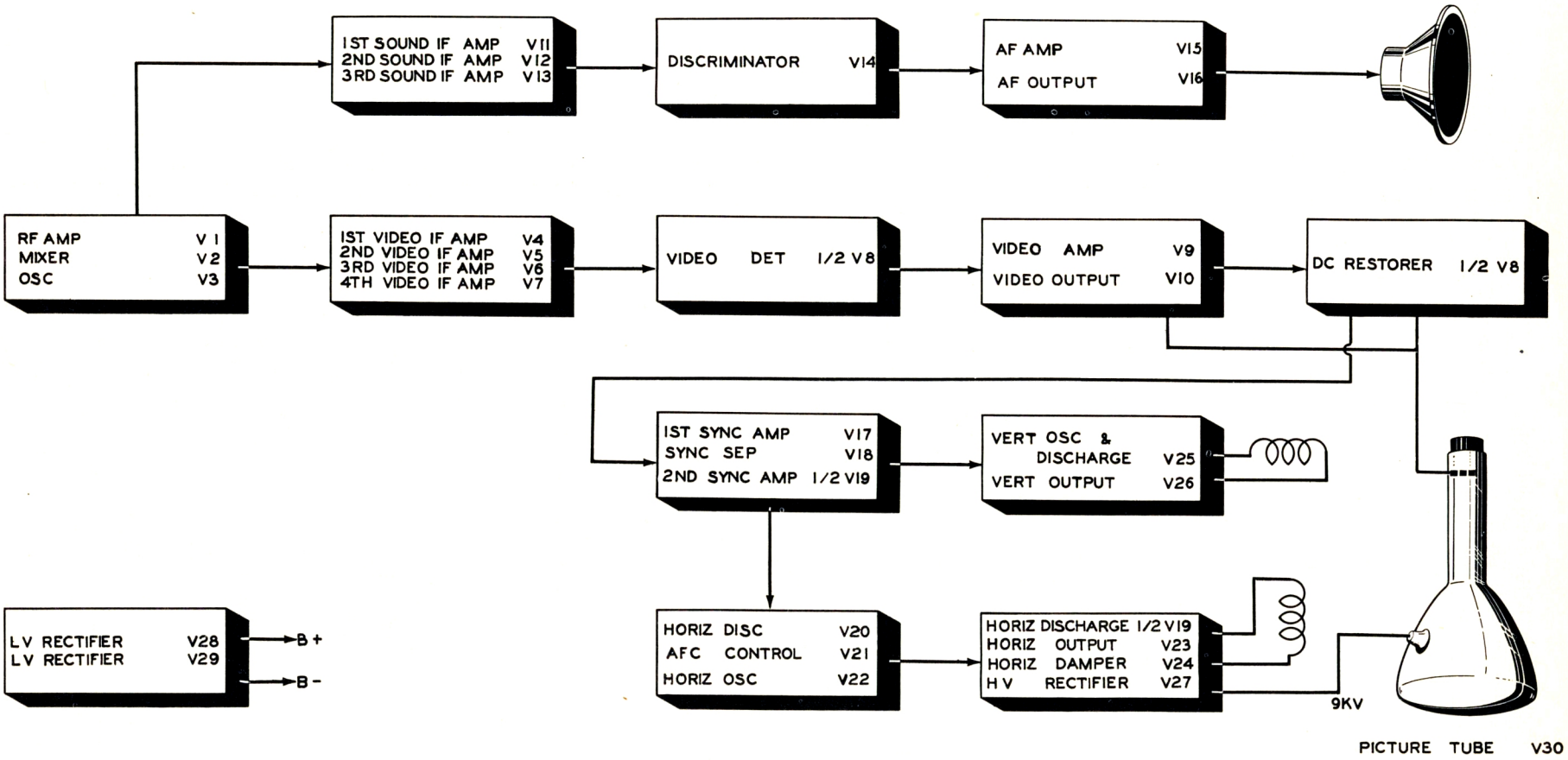

BLOCK DIAGRAM

PARTS LIST AND DESCRIPTIONS

TUBES (SYLVANIA or Equivalent)

ITEM No.	USE	REPLACEMENT DATA: FADA PART No.	REPLACEMENT DATA: STANDARD REPLACEMENT	RMA BASE TYPE	NOTES
V1	RF Amp.	6J6	6J6	7BF	
V2	Mixer	6J6	6J6	7BF	
V3	Oscillator	6J6	6J6	7BF	
V4	1st V. IF Amp.	6AG5	6AG5	7BD	
V5	2nd V. IF Amp.	6AG5	6AG5	7BD	
V6	3rd V. IF Amp.	6AG5	6AG5	7BD	
V7	4th V. IF Amp.	6AG5	6AG5	7BD	
V8	Video Det., DC Res.	6AL5	6AL5	6BT	
V9	Video Amp.	6AU6	6AU6	7BK	
V10	Video Output	6K6GT	6K6GT	7S	
V11	1st S. IF Amp.	6BA6	6BA6	7BK	
V12	2nd S. IF Amp.	6BA6	6BA6	7BK	
V13	3rd S. IF Amp.	6AU6	6AU6	7BK	
V14	Sound Disc.	6AL5	6AL5	6BT	
V15	Audio Amp.	6AT6	6AT6	7BT	
V16	Power Output	6K6GT	6K6GT	7S	
V17	1st Sync. Amp.	6SK7	6SK7	8N	
V18	Sync. Sep.	6SH7	6SH7	8BK	
V19	2nd Sync. Amp., Hor. Discharge	6SN7GT	6SN7GT	8BD	
V20	Hor. Sync. Disc.	6AL5	6AL5	6BT	
V21	Hor. React.	6AC7	6AC7	8N	
V22	Hor. Osc.	6K6GT	6K6GT	7S	
V23	Hor. Output	6BG6-G	6BG6-G	5BT	
V24	Damper	5V4G	5V4G	5L	
V25	Vert. Osc., Discharge	6J5	6J5	6Q	
V26	Vert. Output	6K6GT	6K6GT	7S	
V27	HV Rect.	1B3GT	1B3GT	3C	
V28	LV Rect.	5U4G	5U4G	5T	
V29	LV Rect.	5U4G	5U4G	5T	
V30A	Picture Tube	10BP4	10BP4	12D	Used in models TV-30, 799, 899
B	Picture Tube	12LP4	12LP4	12D	Used in Models 930,940

CAPACITORS

Capacity values given in the rating column are in mfd. for Electrolytic and Paper Capacitors, and in mmfd. for Mica and Ceramic Capacitors.

ITEM No.	RATING: CAP.	RATING: VOLT	REPLACEMENT DATA: FADA PART No.	REPLACEMENT DATA: AEROVOX PART No.	REPLACEMENT DATA: CORNELL-DUBILIER PART No.	REPLACEMENT DATA: ERIE PART No.	REPLACEMENT DATA: SPRAGUE PART No.	IDENTIFICATION CODES AND INSTALLATION NOTES
C1A	40	450	22.22		UP9C729-3		D14367	◓ Filter
B	10	450						◙ Filter
C	80	150						▲ Bias Filter
C2A	40	450	22.23		UP9C897-3		D14648	◓ Filter
B	40	450						◙ Filter
C	10	450						▲ Vert. Out. Plate Decoup.
C3A	80	450	22.24		UP9B730-3		D14369	◓ Filter
B	50	50						▲ Vert. Out. Cath.
C4A	40	450	22.25		UP9C731-1		D14370	◓ Filter
B	10	450						◙ Low Pass Filter
C	10	350						▲ 2nd Sync. Amp. Plate
C5A	20	450	22.26		UP9B337-1		D14371	◓ Audio Out. Screen
B	80	350						▲ Filter
C6A	250	10	22.27	PRS12/250	UP7B808-4		D14338	◙ Filter
B	1000	6		PRS6/1000				▲ Filter
C7	270					GP2K-270		Ant. Coupling
C8	270					GP2K-270		" "
C9	1500		17.12			GP2L-0015		RF Bypass
C10	10					NP0K-10		Fixed Trimmer
C11	10					NP0K-10		" "
C12	1.5		17.67			NP0K-1.5		RF Neutralizer
C13	1.5		17.67			NP0K-1.5		" "
C14	.68		17.66					RF Coupling
C15	4.7					NP0K-4.7		" "
C16	2.2							" "
C17	1500		17.12			GP2L-0015		RF Decoupling
C18	270					GP2K-270		RF Bypass
C19	10					GP1K-10		RF Decoupling
C20	1500		17.12			GP2L-0015		" "
C21	270	500				GP2K-270		IF Coupling
C22	68					GP1K-68		Fixed Trimmer
C23	1500		17.12			GP2L-0015		Mixer Decoupling
C24	4.7					NP0K-4.7		Osc. Feedback
C25	4.7					NP0K-4.7		" "
C26	1500		17.12	1467-0015	1W5D15	GP2L-0015	1FM-215	Fil. Bypass
C27	1500		17.45	1467-0015	1W5D15	GP2L-0015	1FM-215	" "
C28	1500		17.45	1467-0015	1W5D15	GP2L-0015	1FM-215	Bias Filter
C29	1500		17.45	1467-0015	1W5D15	GP2L-0015	1FM-215	1st V. IF Decoupling.
C30	1500		17.45	1467-0015	1W5D15	GP2L-0015	1FM-215	RF Bypass
C31	270	500	17.9	1468-0003	5W5T3	GP2K-270		Video IF Coupling
C32	1500		17.45	1467-0015	1W5D15	GP2L-0015	1FM-215	Bias Filter
C33	1500		17.45	1467-0015	1W5D15	GP2L-0015	1FM-215	2nd V. IF Fil. Byp.
C34	1500		17.45	1467-0015	1W5D15	GP2L-0015	1FM-215	2nd V. IF Decoup.
C35	1500		17.45	1467-0015	1W5D15	GP2L-0015	1FM-215	RF Bypass
C36	270	500	17.9	1468-0003	5W5T3	GP2K-270		Video IF Coupling
C37	1500		17.45	1467-0015	1W5D15	GP2L-0015	1FM-215	Bias Filter
C38	.25	400	12.16	P488-.25	GT4P25		TC-2	" "
C39	1500		17.45	1467-0015	1W5D15	GP2L-0015	1FM-215	3rd V. IF Fil. Byp.
C40	1500		17.45	1467-0015	1W5D15	GP2L-0015	1FM-215	3rd V. IF Decoupling
C41	270	500	17.9	1468-0003	5W5T3	GP2K-270		Video IF Coupling
C42	1500		17.45	1467-0015	1W5D15	GP2L-0015	1FM-215	RF Bypass
C43	1500		17.45	1467-0015	1W5D15	GP2L-0015	1FM-215	4th V. IF Fil. Byp.
C44	82		17.37					4th V. IF Cath.
C45	1500		17.45	1467-0015	1W5D15	GP2L-0015	1FM-215	4th V. IF Decoup.
C46	1500		17.45	1467-0015	1W5D15	GP2L-0015	1FM-215	RF Bypass
C47	270	500	17.9	1468-0003	5W5T3	GP2K-270		Video Coupling
C48	1500		17.45	1467-0015	1W5D15	GP2L-0015	1FM-215	Video Det. Fil. Byp.
C49	10	500	17.33	1468-00001	5W5Q1	GP1K-10		RF Filter
C50	.05	400	12.12	P488-05	GT4S5		TM-15	Video Coupling
C51	.05	400	12.38	P488-05	GT4S5		TM-15	" "
C52	.05	400	12.12	P488-05	GT4S5		TM-15	" "
C53	.05	400	12.12	P488-05	GT4S5		TM-15	Video Coupling
C54	.25	400	12.16	P488-.25	GT4P25		TC-2	Bias Filter

CAPACITORS (CONT.)

ITEM No.	RATING: CAP.	RATING: VOLT	REPLACEMENT DATA: FADA PART No.	REPLACEMENT DATA: AEROVOX PART No.	REPLACEMENT DATA: CORNELL-DUBILIER PART No.	REPLACEMENT DATA: ERIE PART No.	REPLACEMENT DATA: SPRAGUE PART No.	IDENTIFICATION CODES AND INSTALLATION NOTES
C55	1500		17.45	1467-0015	1W5D15	GP2L-0015	1FM-215	1st S. IF Cath. Byp.
C56	1500		17.45	1467-0015	1W5D15	GP2L-0015	1FM-215	1st S. IF Decoupling
C57	.01	400	12.6	P488-01	GT4S1	GP2-335-01	TM-11	2nd S. IF Grid Filter
C58	1500		17.45	1467-0015	1W5D15	GP2L-0015	1FM-215	2nd S. IF Cath. Byp.
C59	1500		17.45	1467-0015	1W5D15	GP2L-0015	1FM-215	2nd S. IF Screen Byp.
C60	1500		17.45	1467-0015	1W5D15	GP2L-0015	1FM-215	2nd S. IF Plate Decoupling
C61	51		17.18			GP1K-50		3rd S. IF Grid Filter
C62	6500		17.35					3rd S. IF Decoupling
C63	270	500	17.9	1468-0003	5W5T3	GP2K-270		De-emphasis
C64	.0025	400	12.2			GP2M-0025		Audio Coupling
C65	.01	400	12.6	P488-01	GT4S1	GP2-335-01	TM-11	Tone Compensation
C66	.01	400	12.6	P488-01	GT4S1	GP2-335-01	TM-11	Audio Coupling
C67	.0025	400	12.2			GP2M-0025		Audio Plate Bypass
C68	.005	400	12.19	P688-005	GT6D5	GP2M-005	TM-25	Audio Coupling
C69	.005	400	12.19	P688-005	GT6D5	GP2M-005	TM-25	Output Plate Bypass
C70	.05	400	12.12	P488-05	GT4S5		TM-15	Sync. Coupling
C71	270	500	17.9	1468-0003	5W5T3	GP2K-270		1st Sync. Amp. Plate
C72	.1	400	12.15	P488-.1	GT4P1		TM-1	1st Sync. Amp. Plate Decoup
C73	270	500	17.9	1468-0003	5W5T3	GP2K-270		Sync. Coupling
C74	.05	400	12.12	P488-05	GT4S5		TM-15	" "
C75	82	500	17.37					Hor. Sync. Coupling
C76	.004	1000	12.35	P1088-004			PX-241	AFC Filter
C77	.01	400	12.6	1468-0005	5W5T5	GP2-335-01	1FM-35	Video Output Cath. Byp.
C78	.015	400	12.36					Fixed Trimmer
C79	.05	400	12.12	P488-05	GT4S5		TM-15	AFC Filter
C80	.015	400	12.36					Phase Shifter
C82	.004	400	12.35	P688-004	GT6D4		TM-24	AFC Coupling
C83	.004	400	12.35	P688-004	GT6D4		TM-24	Hor. Sync. Coupling
C84	.05	400	12.12	P488-05	GT4S5		TM-15	H. Osc. Contr. Screen
C85	.05	400	12.12	P488-05	GT4S5		TM-15	Hor. Osc. Screen
C86	390	500	17.38	1468-0004	5W5T4	GP2K-390	1FM-34	Differentiator Net.
C87	.01	400	12.6	P488-01	GT4S1	GP2-335-01	TM-11	Hor. Sync. Coupling
C88	.001	400	12.34	P688-001	GT6D1	GP2L-001	TM-21	" " "
C89	680	500	17.39			GP2K-680		Hor. Discharge
C90	.05	400	12.38	P488-05	GT4S5		TM-15	Hor. Output Screen
C91	.1	400	12.14	P488-1	GT4P1		TM-1	Hor. Output Cathode
C92	.01	400	12.6	P488-01	GT4S1	GP2-335-01	TM-11	Vert. Sync. Coupling
C93	.002	400	12.2	P688-002	GT6D2	GP2M-002	TM-22	Integrating Net.
C94	.005	400	12.19	P688-005	GT6D5	GP2M-005	TM-25	" " "
C95	.005	400	12.19	P688-005	GT6D5	GP2M-005	TM-25	" " "
C96	4700	500	17.40	1467-005		GP2M-0047	1FM-25	Vert. Osc. Grid
C97	.1	400	12.15	P488-.1	GT4P1		TM-1	Vert. Coupling
C98	.05	600	12.38	P688-05	GT6S5		TM-15	Vert. Discharge
C99	.035	600	12.37					Damper Filter
C100	.05	600	12.38	P688-05	GT6S5		TM-15	" "
C101	.01	400	12.22	P488-01	GT4S1	GP2-335-01	TM-11	Line Filter
C102	.01	400	12.22	P488-01	GT4S1	GP2-335-01	TM-11	" "
C103	500	10000	17.41					HV Filter T. O.

CONTROLS

ITEM No.	RATING: RESISTANCE	RATING: WATTS	REPLACEMENT DATA: FADA PART No.	REPLACEMENT DATA: IRC PART No.	REPLACEMENT DATA: CLAROSTAT PART No.	INSTALLATION NOTES
R1A	1 Meg.	½	52.22			Volume control tapped @ 200KΩ
B	& 10KΩ	½				Contrast control (Dual Concentric)
C	Switch					On-Off switch-SPST
R2A	1 Meg.	½	52.21			Vertical hold (Dual Concentric)
B	& 50KΩ	½				Horizontal Hold
R3	50KΩ	½	52.20	Q11-123	M-44-S	Brightness control
R4	20Ω	2	52.26	W-20	43-20	Horiz. Centering-Center Tap Not Used
R5	20Ω	2	52.26	W20X10	43-20CT	Vert. Centering-Tapped @ 10Ω
R6	1500Ω	4	52.27			Focus control
R7A	5000Ω	½	52.25	Q11-114	AM-19-S	Vert. Linearity
B	Shaft			Not Req.	KSS-3	Attach to R7A Per Instructions
R8	2.5 Meg	½	52.24			Height control
R9A	20KΩ	½	52.23	Q11-120	AM-40-S	Peaking
B	Shaft			Not Req.	KSS_3	Attach to R9A Per Instructions

* On Models 930, 940 the Brightness and Focus controls are combined in one dual concentric control - Fada Part No. 52.49

RESISTORS

ITEM No.	RATING: RESISTANCE	RATING: WATTS	REPLACEMENT DATA: FADA PART No.	REPLACEMENT DATA: IRC PART No.	IDENTIFICATION CODES ALL RESISTORS ARE ± 10% UNLESS OTHERWISE STATED.	
R10	150Ω	½	32.4		RF Amp. Grid	20%
R11	150Ω	½	32.4		" " "	20%
R12	1000Ω	½	32.8	BTS-1000	Bias Network	20%
R13	4700Ω	½	32.9	BTS-4700	RF Amp. Plate	20%
R14	4700Ω	½	32.9	BTS-4700	" " "	20%
R15	1000Ω	½	32.8	BTS-1000	RF Amp. Plate Decoupling	20%
R16	1 Meg.	½	32.23	BTS-1 Meg.	Mixer Grid	20%
R17	4700Ω	½	32.9	BTS-4700	Osc. Plate	20%
R18	150Ω	½	32.4		Decoupling	20%
R19	1000Ω	½	32.8	BTS-1000	Conv. Plate Decoupling	20%
R20	47Ω	½			Osc. Cathode	20%
R21	100KΩ	½	32.17	BTS-100K	Osc. Grid	20%
R22	100KΩ	½	32.17	BTS-100K	Osc. Grid	20%
R23	10KΩ	½	32.80	BTS-10K-5%	1st Video IF Grid	5%
R24	39Ω	½	32.64		1st Video IF Cathode	
R25	1000Ω	½	32.8	BTS-1000	IF Contrast Bias Network	20%
R26	150Ω	½	32.4		Decoupling	
R27	1000Ω	½	32.8	BTS-1000	"	20%
R28	150Ω	½	32.4		"	
R29	680KΩ	½	32.93	BTS-680K-5%	Voltage Dropping	5%
R30	10KΩ	½	32.80	BTS-10K-5%	2nd Video IF Grid	5%
R31	1000Ω	½	32.8	BTS-1000.	IF Contrast Bias Network	20%
R32	39Ω	½	32.64		2nd Video IF Cathode	
R33	1000Ω	½	32.8	BTS-1000	Decoupling	20%
R34	150Ω	½	32.4		"	
R35	4700Ω	½	32.75	BTS-4700-5%	3rd Video IF Grid	5%
R36	39Ω	½	32.64		3rd Video IF Cathode	
R37	2700Ω	½	32.57	BTS-2700-5%	3rd Video IF Plate	5%
R38	1000Ω	½	32.8	BTS-1000	Decoupling	20%
R39	150Ω	½	32.4		"	
R40	8200Ω	½	32.77	BTS-8200	Contrast Bias Network	
R41	18KΩ	½	32.81	BTS-18K	" " "	

RESISTORS (CONT.)

ITEM No.	RATING: RESISTANCE	RATING: WATTS	REPLACEMENT DATA: FADA PART No.	REPLACEMENT DATA: IRC PART No.	IDENTIFICATION CODES	
R42	680Ω	½	32.31	BTS-680	" " "	
R43	10KΩ	½	32.11	BTS-10K	" " "	
R44	2700Ω	½	32.57	BTS-2700	" " "	
R45	150Ω	½	32.4		4th Video IF Cathode	
R46	5600Ω	½	32.76	BTS-5600-5%	4th Video IF Plate	5%
R47	1000Ω	½	32.8	BTS-1000	Decoupling	20%
R48	3900Ω	½	32.73	BTS-3900-5%	Diode Load	5%
R49	470KΩ	½	32.92	BTS-470K	1st Video Amp. Grid	20%
R50	3300Ω	½	32.32	BTS-3300	1st Video Amp. Plate	
R51	6800Ω	½	32.10	BTS-6800	" " " "	
R52	820KΩ	½	32.94	BTS-820K-5%	2nd Video Amp. Grid	5%
R53	1.2 Meg.	½	32.96	BTS-1.2Meg-5%	Bias Network	5%
R54	330Ω	½	32.67		2nd Video Amp. Cathode	
R55	3300Ω	1	32.72	BTA-3300	Voltage Dropping	
R56	10KΩ	½	32.80	BTS-10K	Sync. Isolation	
R57	100KΩ	½	32.89	BTS-100K	Picture Tube Grid	20%
R58	1 Meg.	½	32.33	BTS-1 Meg.	Diode Load	20%
R59	47KΩ	½	32.87	BTS-47K	Bias Network	
R60	150KΩ	½	32.90	BTS-150K	" "	
R61	100Ω	½	32.2		1st Sound IF Cathode	20%
R62	1000Ω	½	32.8	BTS-1000	1st Sound IF Decoupling	20%
R63	470KΩ	½	32.92	BTS-470K	2nd Sound IF Grid	20%
R64	100Ω	½	32.2		2nd Sound IF Cathode	20%
R65	3300Ω	½	32.32	BTS-3300	2nd Sound IF Screen	20%
R66	1000Ω	½	32.8	BTS-1000	2nd Sound IF Plate	20%
R67	22KΩ	½	32.83	BTS-22K	3rd Sound IF Grid	
R68	10KΩ	1	32.79	BTA-10K	Voltage Dropping	
R69	10KΩ	½	32.11	BTS-10K	Bleeder	
R70	100KΩ	½	32.89	BTS-100K	Diode Load	
R71	100KΩ	½	32.89	BTS-100K	" "	
R72	22KΩ	½		BTS-22K	De-emphasis	20%
R73	2.2Ω	1	32.61	BW-½-2.2	Filament Dropping	
R74	10 Meg.	½	32.99	BTS-10 Meg.	1st Audio Grid	20%
R75	330KΩ	½	32.19	BTS-330K	1st Audio Plate	20%
R76	270KΩ	½	32.44	BTS-270K	Audio Output Grid	
R77	1100Ω	5		AB-1100	Filter See Note 2	
R79	6.8 Meg.	½	32.46	BTS-6.8 Meg.	Bias Network	
R80	1 Meg.	½	32.33	BTS-1 Meg.	1st Sync. Amp. Grid	20%
R81	4700Ω	1	32.74	BTA-4700	1st Sync. Amp. Plate	
R82	4700Ω	1	32.74	BTA-4700	1st Sync. Amp. Plate	
R83	1 Meg.	½	32.33	BTS-1 Meg.	Sync. Sep. Grid	
R84	4.7 Meg.	½	32.98	BTS-4.7 Meg.	Bias Network	
R85	6800Ω	½	32.10	BTS-6800	1st Sync. Amp. Plate	
R86	1 Meg.	½	32.33	BTS-1 Meg.	2nd Sync. Amp. Grid	20%
R87	4700Ω	½		BTS-4700	2nd Sync. Amp. Plate	
R88	1000Ω	½	32.8	BTS-1000	Decoupling	
R89	22KΩ	½	32.83	BTS-22K	Differentiator	20%
R90	22KΩ	½	32.83	BTS-22K	Integrator	20%
R91	8200Ω	½	32.77	BTS-8200	"	
R92	8200Ω	½	32.77	BTS-8200	"	
R93	1.5 Meg.	½	32.97	BTS-1.5 Meg. -5%	Vert. Osc. Grid	5%
R94	220KΩ	½	32.91	BTS-220K	Vert. Osc. Plate	
R95	100KΩ	½	32.89	BTS-100K	Voltage Divider	
R96	2.2 Meg.	½	32.34	BTS-2.2 Meg.	" "	
R97	2.2 Meg.	½	32.34	BTS-2.2 Meg.	Vert. Output Grid	
R98	56KΩ	½	32.88	BTS-56K	Vert. Osc. Plate	
R99	8200Ω	½	32.78	BTS-8200-5%	Peaking	5%
R100	1800Ω	½		BTS-1800	Vert. Output Cathode	
R101	10KΩ	1	32.79	BTA-10K	Vert. Output Plate	20%
R102	470KΩ	½	32.92	BTS-470K	Diode Load	
R103	470KΩ	½	32.92	BTS-470K	" "	
R104	1 Meg.	½	32.33	BTS-1 Meg.	" "	
R105	470KΩ	½	32.92	BTS-470K	AFC Grid	20%
R106	560Ω	½	32.68	BTS-560	AFC Grid Current Limiting	
R107	10Ω	½	32.63		AFC Cathode	5%
R108	27KΩ	1	32.85	BTA-27K	Bleeder	
R109	18KΩ	1	32.86	BTA-18K	AFC Screen Dropping	
R110	47KΩ	1	32.15	BTA-47K-5%	AFC Plate	5%
R111	39KΩ	1	32.86	BTA-39K-5%	AFC Plate	5%
R112	27KΩ	½	32.84	BTS-27K	Horiz. Osc. Grid	
R113	10KΩ	1	32.79	BTA-10K	Horiz. Osc. Screen	
R114	5000Ω	5	117.18	AB-5000	Horiz. Osc. Plate	
R115	6800Ω	½	32.10	BTS-6800	Differentiator	
R116	220KΩ	½	32.91	BTS-220K	Horiz. Discharge Grid	20%
R117	680KΩ	½	32.93	BTS-680K-5%	Horiz. Discharge Plate	5%
R118	6800Ω	½	32.10	BTS-6800	Peaking	
R119	470KΩ	½	32.92	BTS-470K	Horiz. Output Grid	
R120	100Ω	1	32.53		Horiz. Output Cathode	
R121	22KΩ	1	32.13	BTA-22K	Horiz. Output Screen	
R122	18KΩ	1	32.82	BTA-18K	" " "	
R123	6300Ω	50	117.19		Damping See Note 1	
R124	1 Meg.	1	32.95	BTA-1 Meg.	High Volt. Filter	
R125	1800Ω	1	32.69	BTA-1800	Focus Coil Shunt	
R126	270Ω	2	32.66	BW-2-270	" " "	
R127A	1360Ω	17	117.20		Bleeder Network	
B	230Ω	10			" "	
R128A	6750Ω	3.2	117.21		" "	
B	12Ω	½			" "	
C	93Ω	4			" "	
R130	3.3Ω	½	32.62	BW-½-3.3-5%	High Voltage Rectifier Filament	5%
R131	10KΩ	½	32.11	BTS-10K	Mixer Grid Coil Shunt	
R132	150KΩ	½	32.90	BTS-150K	ACC. Anode Dropping	
R133	27KΩ	½	32.84	BTS-27K	Tone Compensation	

Note 1. This resistor is tapped at 500Ω & 1000Ω.

Note 2. Some models may use two 2200Ω 2W resistors in parallel in this application.

TV30, 799, 899, 930, 940

PARTS LIST AND DESCRIPTIONS (Continued)

TRANSFORMER (POWER)

ITEM No.	RATING				REPLACEMENT DATA			
	PRI.	SEC. 1	SEC. 2	SEC. 3	FADA PART No.	STANCOR PART No.	CHICAGO PART No.	MERIT PART No.
T1	117VAC @ 2.5A	670VAC @ 300MA	12VAC @ 5.1A	5VAC @ 6A SEC. 4 5VAC @ 2A	42.12	P-8152	TP-365	P-3061

TRANSFORMER (SWEEP CIRCUITS)

ITEM No.	RATING DC RESISTANCE		REPLACEMENT DATA				NOTES
	PRI.	SEC.	FADA PART No.	STANCOR PART No.	CHICAGO PART No.	MERIT PART No.	
T2	165Ω	1310Ω	42.15	A-8121	TB0-1	A-4000	Vert.Block.Osc.Trans.
T3	600Ω	6.5Ω	42.14	A-8115	TS0-1	A-3035	Vert. Output Trans.
T4	37Ω	35Ω tapped @ 9.5Ω	37.104				Hor.Sync.Disc.Trans.
T5	420Ω tapped @ 180Ω	10.6Ω tapped @ .6Ω SEC. 2 0Ω	42.103				Hor. Output Trans.
T6	247Ω		37.102	FC-10			Focus Coil
T8A	68Ω		37.101	DY-1			Vert. Deflection Yoke
B	14Ω						Hor. Deflection York

TRANSFORMER (AUDIO OUTPUT)

ITEM No.	RATING IMPEDANCE		DC RES.		REPLACEMENT DATA				INSTALLATION NOTES
	PRI.	SEC.	PRI.	SEC.	FADA PART No.	STANCOR PART No.	CHICAGO PART No.	MERIT PART No.	
T9	7300Ω	3.2Ω	480Ω	.7Ω		A-3878	R0-9	A-2931	

SPEAKER

ITEM No.	RATING		REPLACEMENT DATA			NOTES
	FIELD RES.	V. C. IMP.	FADA PART No.	JENSEN PART No.	QUAM PART No.	
SP1	PM	3.2Ω				

FILTER CHOKE

ITEM No.	RATINGS			REPLACEMENT DATA				INSTALLATION NOTES
	TOTAL DIRECT CURRENT	D. C. RESISTANCE	INDUCTANCE (0 CURRENT 1000 ~)	FADA PART No.	STANCOR PART No.	CHICAGO PART No.	MERIT PART No.	
L1	300MA	50Ω	3 Henries		C-2326*	TR-3300	C-2991	* Redrill new mounting hole.

COILS (RF-IF)

ITEM No.	USE	DC RES.		REPLACEMENT DATA		NOTES
		PRI.	SEC.	FADA PART No.	MEISSNER PART No.	
L2	Ant. Trans.	0Ω				Part of tuner assy.
L3	Interference Trap	0Ω				" " " "
L4	"	0Ω				" " " "
L5	Fil. Choke	0Ω		37.89		" " " "
L6	Mixer Grid	.1Ω				" " " "
L7	1st Video			37.96		
	IF & Sound Trap	.2Ω		37.89		" " " "
L8	Fil. Choke	0Ω				
L9	2nd Video			37.97		
	IF	.2Ω	0Ω	37.89		
L10	Fil. Choke	0Ω				
L11	3rd Video			37.99		
	IF	.2Ω	0Ω	37.89		
L12	Fil. Choke	0Ω				
L13	4th Video			37.100		
	IF	.2Ω		37.198		
L14	Sound Trap	.1Ω		37.89		
L15	Fil. Choke	0Ω				
L16	5th Video					
	IF	.1Ω		37.89		
L17	Fil. Choke	0Ω				
L18	Peaking	6Ω				Wound on 39KΩ resistor, 180 Microhenry.
L19	Peaking	8Ω				250 Microhenry
L20	Peaking	5Ω				Wound on 22KΩ resistor, 120 Microhenry.
L21	Peaking	4Ω				93 Microhenry
L22	Peaking	5Ω				Wound on 22KΩ resistor, 120 Microhenry
L23	Peaking	4Ω				93 Microhenry
L24	1st Sound					
	IF	.1Ω	0Ω	37.94		
L25	2nd Sound					
	IF	.1Ω	0Ω	37.94		
L26	Sound Disc. Trans.	0Ω	0Ω	37.95		
L27	Hor. Width Control	.6Ω		37.106		
L28	Hor. Linearity Cont.	37Ω		37.105		

MISCELLANEOUS

ITEM No.	PART NAME	FADA PART No.	NOTES
M2	Fuse		AGC 1/4 Amp.
M3	Tuner Assy.	42.21	Complete unit
M4	Power Cord	92.115	
M5	Receptacle		Power Interlock Plug
M6	Terminal Board	152.28	(3 Terminals with Link)
M7	Terminal Board	152.27	Antenna (2 Terminals)

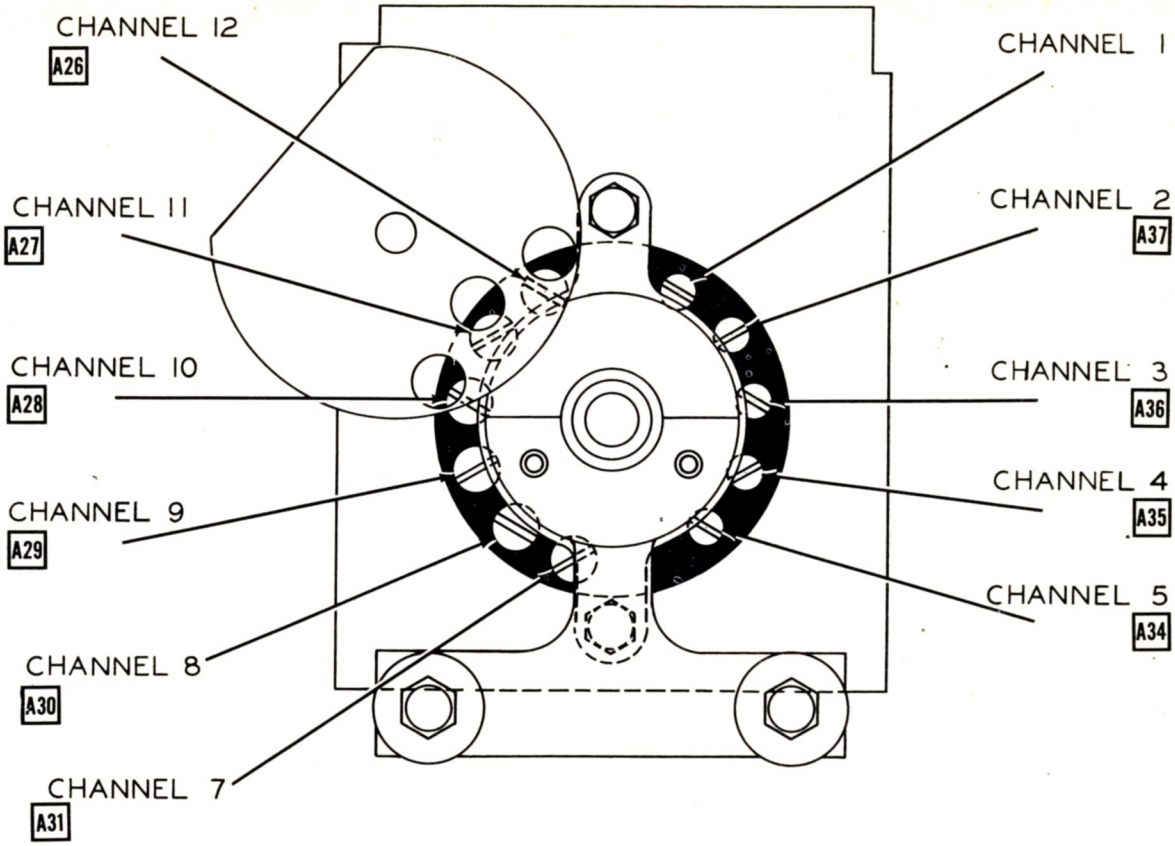

RF OSCILLATOR ALIGNMENT POINTS

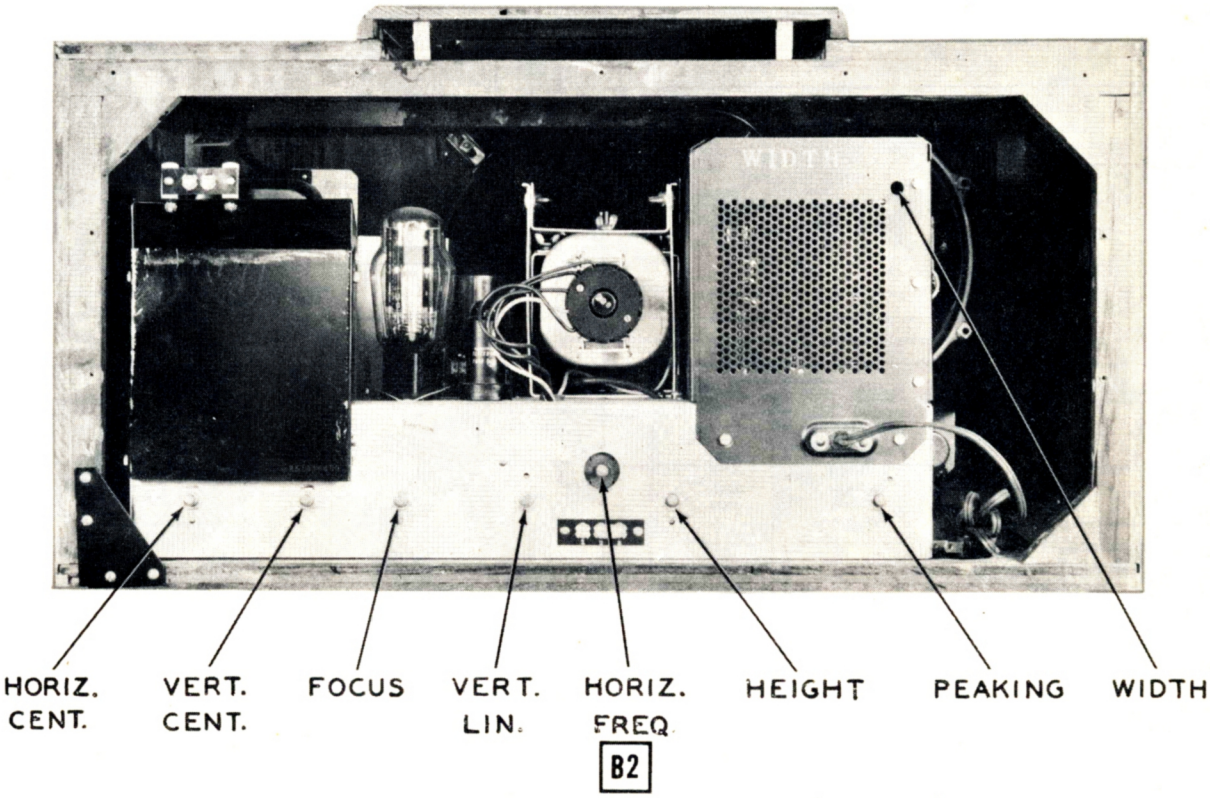

CABINET–REAR VIEW

HORIZONTAL OSCILLATOR ALIGNMENT

HORIZONTAL OSCILLATOR ALIGNMENT CHECK:

While receiving a television signal turn the horizontal hold control fully counter-clockwise. Remove the picture momentarily by turning the contrast control fully counter-clockwise and then return it to its normal operating position. The picture should pull back into synchronization.

Now turn the horizontal hold control fully clockwise. Remove the picture momentarily by turning the contrast control fully counter-clockwise and then return to its normal operating position. The picture should pull back into synchronization.

If receiver synchronizes properly under these checks it is not necessary to align the horizontal oscillator. However, if the picture is not normal or stable, the horizontal oscillator must be aligned.

SLIGHT RETOUCH ALIGNMENT

If the receiver failed in the above check at either extreme of the hold control, it may be possible to align the horizontal oscillator by making slight adjustments.

Tune in a TV station and adjust fine tuning for best sound quality. Adjust vertical hold control to vertically synchronize the picture. Adjust the contrast control to slightly less than normal. Turn the horizontal hold control to the extreme position in which the oscillator falls out of synchronization. Momentarily remove the signal. Adjust B_2 (rear of chassis) until the oscillator pulls into synchronization. Check hold and pull-in as outlined above.

COMPLETE ALIGNMENT

Tune in a TV station for the best sound quality. Adjust vertical hold control to vertically synchronize the picture. Adjust the contrast control to slightly less than normal.

Adjust B_1 until the blanking bar, which may appear in the picture, moves to the right and off the raster. If ripples occur in the raster turn B_1 in a clockwise direction until the unstable condition is removed. The length of this adjustment screw in its correct position is usually about 1/2 inch beyond the bushing.

Turn horizontal hold control fully counter-clockwise and adjust B_2 clockwise until picture fails to synchronize. Now slowly turn B_2 counter-clockwise to the point where the picture synchronizes. Readjust B_1 so that the left side of the picture is close to the left side of the raster but does not fold over.

Turn the horizontal hold control fully clockwise. The right side of the picture should be close to the right side of the raster, but should not fold over. If it does, readjust B_1.

Momentarily remove the signal. When signal is restored, the picture should fall into synchronization. If it does not, turn B_2 counter-clockwise until picture falls into synchronization.

Turn horizontal hold control fully counter-clockwise. Picture should fall back into synchronization after momentary removal of the signal.

If picture fails to synchronize after momentary removal of the signal at both extremes of the horizontal hold control, there may be insufficient pull-in range. However, if picture will pull in through 3/4 of the hold control range, operation should be satisfactory as excessive pull-in is objectionable. Excessive pull-in makes the control circuits more sensitive which may result in their being triggered by noise pulses. Also the vertical synchronizing and equalizing pulses may cause a bend in the upper part of the picture.

LINEARITY ADJUSTMENTS

HEIGHT AND VERTICAL LINEARITY ADJUSTMENTS.

Adjust the HEIGHT control until picture fills mask vertically (6 3/8 inches). Adjust VERTICAL LINEARITY for best linearity top to bottom. Readjust the HEIGHT control for proper height. The two controls are interacting and adjustment of one will require readjustment of the other. Adjust vertical centerring to center picture vertically.

WIDTH AND HORIZONTAL LINEARITY ADJUSTMENTS.

Turn the horizontal peaking control clockwise as far as possible without crowding the right side of picture. This provides maximum voltage to picture tube second anode. Adjust width control until raster fills the mask horizontally (8 1/2 inches). Adjust the horizontal linearity control until picture is symmetrical left to right. (It may be necessary to slightly readjust the horizontal peaking control). Adjust the horizontal centering control to center picture horizontally.

If continued adjustments of the peaking, width and linearity controls fail to give proper linearity, it may be necessary to move the tap on R123 which is located in the high voltage compartment. After this tap is moved, it will be necessary to readjust the peaking, width and linearity controls.

DISASSEMBLY INSTRUCTIONS

1. Remove eight push-on type control knobs.
2. Remove nine screws holding back cover. Remove back cover.
3. Remove speaker plug from speaker.
4. Remove five 7/16" hex head bolts holding chassis.
5. Remove two wood screws from rear of picture tube top cover. Remove cover.
6. Remove two wood screws holding picture tube front cover. Remove cover.
7. Loosen two screws holding each clamp at top of picture tube. Pull picture tube out front of cabinet.
8. Remove chassis by pulling out back of cabinet.
9. Remove four 1/4" hex nuts holding speaker. Remove speaker.

CAUTION: REMOVE PICTURE TUBE BEFORE REMOVING CHASSIS.